Valves and taps



NOTO

Data sheet LINE 7100

Full bore ball valves - ISO 228/1

GENERAL FITTINGS
YOUNIQUE · ITALIAN

Contents

DESCRIPTION 3
ADVANTAGES 3
FIELDS OF APPLICATION 4
BALL VALVES WITH BUTTERFLY: COMPONENTS AND MATERIALS 5
BALLE VALVES WITH LEVER: COMPONENTS AND MATERIALS 6
CERTIFICATIONS 7
AVAILABLE DIMENSIONS 7
REGULATIONS 7
ASSEMBLY INSTRUCTIONS 8

LINE 7100

Full bore ball valves - ISO 228/1



DESCRIPTION

Full bore ball valves of LINE 7100 are suitable for the realization of heating and air conditioning systems, for sanitary and compressed air installations. They can also be used in any type of hydraulic installation (commercial, domestic, industral and agricultural) and with non-aggressive fluids.
Threads complies with UNI EN ISO 228-1 law: “Piping thread for coupling not with thightness on the thread”.
Valves have F/F, M/F or M/M threads.
The valves are available with plastic-coated steel levers or with aluminium levers and butterfly.

ADVANTAGES

- Available with steel/aluminium lever or steel/aluminium buttefly
- Not nickel-plated inside in accordance with European regulations on drinking water
- Raw materials complying with UBA LIST

FIELDS OF APPLICATION

APPLICATIONS		T. min.	T. max	Max. pressure
	drinking water	-20°C	+120°C	PN20 - PN25 - PN40
	hot sanitary water	-20°C	+120°C	PN20 - PN25 - PN40
	cooling	-20°C	+120°C	PN20 - PN25 - PN40
	heating	-20°C	+120°C	PN20 - PN25 - PN40
	floor heating	-20°C	+120°C	PN20 - PN25 - PN40
	irrigation	-20°C	+120°C	PN20 - PN25 - PN40
	compressed air	-20°C	+120°C	PN20 - PN25 - PN40
	-20°C: only with antifreeze liquid (glycol) in % max of 30%			

S

BALL VALVES WITH BUTTERFLY: COMPONENTS AND MATERIALS

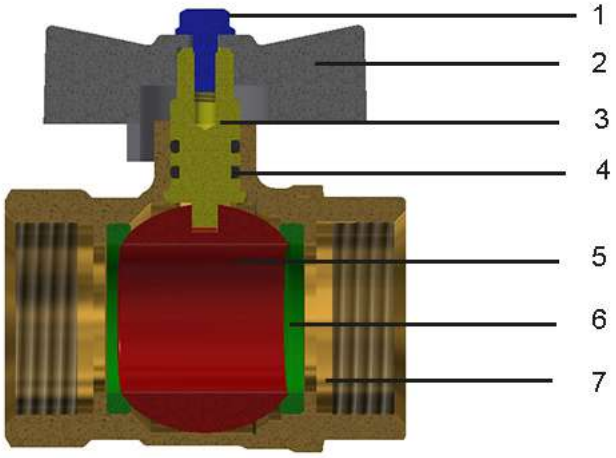

LEGEND		COMPONENTS	MATERIALS
	1	Screw	CB4F
	2	Butterfly	Coated aluminium
	3	Stem	Brass CW617N - UNI EN 12164
	4	Stem O-Ring	Elastomer for drinking water
	5	Ball	Brass CW617N - UNI EN 12165
	6	Ball seal	PTFE
	7	Body	Brass CW617N - UNI EN 12165

BALLE VALVES WITH LEVER: COMPONENTS AND MATERIALS

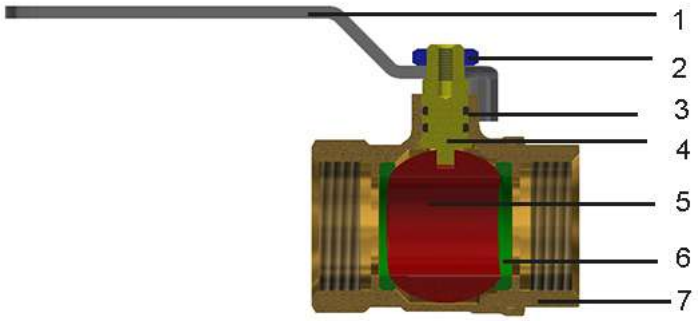

LEGEND		COMPONENTS	MATERIALS
	1	Lever	Plastic coated zinc plated steel/Aluminium
	2	Nut	FE ZNB
	3	Stem O-Ring	Elastomer for drinking water
	4	Stem	Brass CW617N - UNI EN 12164
	5	Ball	Brass CW617N - UNI EN 12165
	6	Ball seal	PTFE
	7	Body	Brass CW617N - UNI EN 12165

CERTIFICATIONS

COUNTRY	CERTIFICATION	COUNTRY	CERTIFICATION	COUNTRY	CERTIFICATION
					
					
					

AVAILABLE DIMENSIONS

Dimensions	PN
1/2"	PN 40
3/4"	PN 40
1"	PN 40
1"1/4	PN 25
1"1/2	PN 25
2"	PN 25
2"1/2	PN 20
3"	PN 20
4"	PN 20

REGULATIONS

• EN ISO 228-1
Threads complies with UNI EN ISO 228-1 law: “Piping thread for coupling not with thightness on the thread”.

• UNI EN 13828
“Ball valves of copper alloys and stainless steel hand operated, for the supply of drinking water in buildings”.

• D.M. 174 (06/04/2004)
Raw materials used are of high quality and comply with the Ministerial Decree N°174 dated 06/04/2004 concerning the materials and the items used in fixed installations for water collection, treatment and supply.

• Comply with 4MS, UBA List (BC group), DIN 50930/6 Dir. 2011/65/UE, 6C attachment III (RhOSII). The UBA list will be gradually replaced and supplemented by the new European system, the European Positive List (EU Positive List), managed by ECHA, although UBA-certified products may continue to be used in accordance with the transitional deadlines set out in the European Drinking Water Directive (DWD 2020/2184).

ASSEMBLY INSTRUCTIONS

1. The valves can be installed in any position, as long as they are visible and easily reachable and the operating lever is free and it can be turned without difficulties into the open and close position.
2. Bi-directional flow.
3. For the ball valve threading couplings to the pipes, please use suitable tapes.
4. The installation have to be planned and realized in order to avoid strain of flexion, torsion or other forces that could damage the valve, obstruct its thightness and its correct operating.
5. The screwing to the pipe have to be done by suitable tools, using valves hexagonal extremities specifically manufactured. The clamping couple have to guarantee the tightness without creaking or damage any part of the valves.
6.Avoid any valves damaging, especially for the components that guarantee the tightness, for operating organs and for mechanical locks and unlocks.
7. Operate periodically the valve with opening and closing cycles.

GENERAL FITTINGS SPA
Via Golgi 73/75, 25064 Gussago (BS) - ITALY
te. +39 030 3739017
www.generalfittings.it