Fittings for multilayer pipe



COMPREX

Data sheet LINE 5E00

Compression fittings with removable pipe holder and cut olive

GENERAL FITTINGS
YOUNIQUE · ITALIAN

Contents

DESCRIPTION 3
ADVANTAGES 3
FIELDS OF APPLICATION 4
COMPONENTS AND MATERIALS 5
THREADS AND NUTS TIGHTENING 6
REGULATIONS 6
CERTIFICATIONS 6
ASSEMBLY INSTRUCTIONS 7

LINE 5E00

Compression fittings with removable pipe holder and cut olive

COMPREX



DESCRIPTION

LINE 5E00 is made of compression fittings with removable pipe holder and cut olive. They are suitable for hot and cold water supply in sanitary and heating installations, and for any kind of sanitary installation such as domestic, commercial, industry and farming and with any type of non-corrosive fluid.
The seal is guaranteed by the mechanical tightening of the fitting and the compression of the O-Ring of the pipe holder.

ADVANTAGES

- Wide range
- For drinking water and heating
- Seal guaranteed by the mechanical tightening of the fitting and the compression of the O-Ring of the pipe holder.
- Raw materials complying with UBA LIST
- No contact between nickel and water

FIELDS OF APPLICATION

APPLICATIONS		T. min.	T. max	T. of the system	Max. pressure
	drinking water	-20°C	+120°C	-20°C/+95°C	10 bar
	sanitary hot water	-20°C	+120°C	-20°C/+95°C	10 bar
	cooling	-20°C	+120°C	-20°C/+95°C	10 bar
	heating	-20°C	+120°C	-20°C/+95°C	10 bar
	floor heating	-20°C	+120°C	-20°C/+95°C	10 bar
	irrigation	-20°C	+120°C	-20°C/+95°C	10 bar
	-20°C: with the use of glycol in a maximum percentage of 30%				

S

COMPONENTS AND MATERIALS

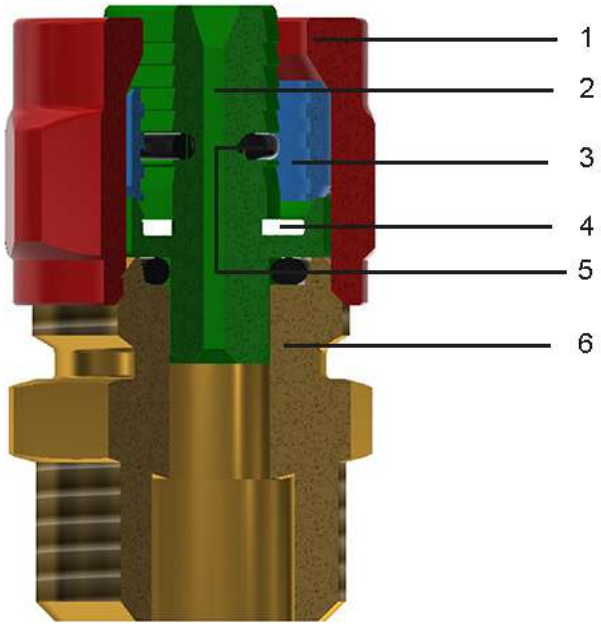

LEGEND		COMPONENTS	MATERIALS
	1	Nut	Brass CW617N - UNI EN 12165
	2	Insert	Brass CW617N - UNI EN 12164
	3	Olive	Brass CW617N - UNI EN 12164
	4	Insulated ring	TEFLON - FL8020
	5	O-Ring	Elastomer for drinking water
	6	Body	Brass CW617N - UNI EN 12165

THREADS AND NUTS TIGHTENING

Ø	Thread coupling	N° Turns (+1/4)
Ø 16	M21x1,5	3/4
Ø 18	M25x1,5	3/4
Ø 20	M25x1,5	3/4
Ø 26	M33x1,5	1
Ø 32	M38x1,5	3/4

REGULATIONS

• UNI EN ISO 21003-3
Fittings complies with UNI EN ISO 21003-3 law:"Multilayer piping systems for hot and cold water supply installations inside building".

• EN ISO 228-1
Threads complies with UNI EN ISO 228-1 law: "Piping thread for coupling not with thightness on the thread".

• D.M. 174 (06/04/2004)
Raw materials used are of high quality and comply with the Ministerial Decree N°174 dated 06/04/2004 concerning the materials and the items used in fixed installations for water collection, treatment and supply.

• Comply with 4MS, UBA List (BC group), DIN 50930/6 Dir. 2011/65/UE, 6C attachment III (RhOSII). The UBA list will be gradually replaced and supplemented by the new European system, the European Positive List (EU Positive List), managed by ECHA, although UBA-certified products may continue to be used in accordance with the transitional deadlines set out in the European Drinking Water Directive (DWD 2020/2184).

• UNI EN 1254-3
Fittings comply with UNI EN 1254-3 law: "Sanitary fittings for plastic pipes with compression ends".

CERTIFICATIONS

COUNTRY	CERTIFICATION	COUNTRY	CERTIFICATION
			ICIM

ASSEMBLY INSTRUCTIONS

Cut the pipe perpendicularly to its axis using an appropriate pipe-cutting tool [code TT500.00].



Insert nut and olive on the pipe.



Insert the plug into the pipe until it stops.



Assemble the fitting with the plug.



Screw the nut by hand until allowed and with an hexagonal spanner screw it until you reach the number of threads (table on previous page).



GENERAL FITTINGS SPA
Via Golgi 73/75, 25064 Gussago (BS) - ITALY
te. +39 030 3739017
www.generalfittings.it